schuchmann

Invoice address:

Dispatch address:
☐ See invoice address

☐ **Order**
☐ **Cost estimate**

Customer No.: _____

Orderer: _____

Date _____

Signature: _____

Commission: _____

MALTE – Posterior Walking Aid

INNOVATION

- Lightweight and folding aluminium frame (Size 0 cannot be folded)
- Individual height and width adjustable handles
- PU rear wheels with integrated backwards stop function in the hub, can be switched off
- PU front wheels with direction locks

HMV No.: 10.46.02.3029

Dimensions - basic model						
		Size 0 MINI frame cannot be folded up	Size 1	Size 2	Size 3	Size 4
A1	Handle height	29 - 53 cm	34 - 58 cm	51 - 75 cm	68 - 94 cm	87 - 113 cm
A2	Height of forearm supports	-	46 - 70 cm	63 - 87 cm	79 - 103 cm	98 - 124 cm
B	Handle spacing	22 - 36 cm	22 - 36 cm	30 - 44 cm	38 - 52 cm	43 - 57 cm
C	Seat height	-	33 cm	45 cm	60 cm	70 cm
D	Total width	52 cm	51 cm	61 cm	68 cm	75 cm
E	Total length	58 cm	58 cm	70 cm	77 cm	87 cm
	Frame height (folded)	37 cm	25 cm	32 cm	34 cm	37 cm
	Transport dimensions (L x W x H)	58 x 52 x 37 cm	58 x 51 x 25 cm	70 x 61 x 32 cm	77 x 68 x 34 cm	87 x 75 x 37 cm
	Max. load	20 kg	30 kg	50 kg	75 kg	100 kg
	Weight	3.9 kg	7.1 kg	8.3 kg	8.5 kg	10.2 kg

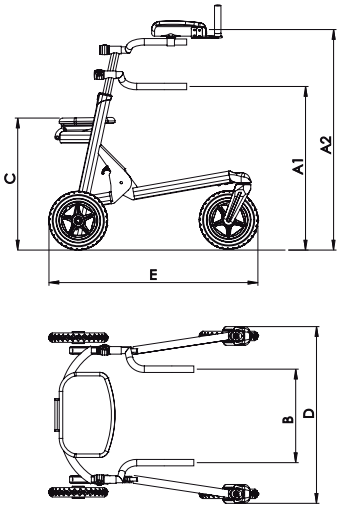

PROFESSIONAL ASSISTANCE for LIVING
Equipment with expertise...

Simone FEJER
Physiotherapist

T: 0434 339 910
E: simone@pafl.com.au
W: www.pafl.com.au

Basic model

MALTE Size 0 MINI Frame colour: Lazurite blue metallic (frame cannot be folded up)	MALTE Size 1	MALTE Size 2	MALTE Size 3	MALTE Size 4
Price / piece	Price / piece	Price / piece	Price / piece	Price / piece
☐ 3500100/M	☐ 7501000/M	☐ 7502000/M	☐ 7503000/M	☐ 7504000/M

Frame colours

Colour selection for Size 1

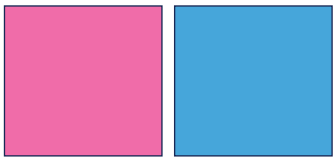

Price	
☐ Telemagenta (pink) (9200012)	incl.
☐ Sky blue (9200013)	incl.

Colour selection for Size 2

Price	
☐ Lazurite blue metallic (9200010)	incl.
☐ Traffic red (9200007)	incl.

Colour selection for Sizes 3+4

Price	
☐ Anthracite metallic (9200014)	incl.
☐ Pure white (9200100)	incl.

Coated with an individual colour (on request)

Please provide the requested colour here:

RAL _____

Price
☐ 7500090

Accessories

Forearm armrests with handles
lower armrests are adjustable in depth, height and angle - handles adjustable in depth and angle (not possible for Size 0)

	Length	Width
Size 1	18 cm	6.5 cm
Size 2	25 cm	8 cm

Price / set

☐ Size 1 (7501001)
☐ Size 2 (7502001)

Forearm armrests with grip balls
lower armrests are adjustable in depth, height and angle - handles adjustable in depth and angle (not possible for Size 0)

	Length	Width
Size 1	18 cm	6.5 cm
Size 2	25 cm	8 cm

Price / set

☐ Size 1 (7501002)
☐ Size 2 (7502002)

Grip bar – pivoting, as a cross-bar between the handles (not possible for Size 0+4)

Price / piece

☐ For Size 1 (7501003)
☐ For Size 2 (7502003)
☐ For Size 3 (7503003)

Stops for the handles

Price / set

☐ 7500004

Accessories

Combined pelvic and buttock pelotte pads for Sizes 1-4
height, width and depth adjustable, PU padded

	Width
Size 1	15 - 23 cm
Size 2	20 - 28 cm
Size 3	24 - 34 cm

Price / set

☐ Size 1 (7501005)
☐ Size 2 (7502005)
☐ Size 3 (7503005)

Combined pelvic and buttock pelotte pads for Size 0
height, width and depth adjustable, PU padded

	Width
For Size 0	15 - 23 cm

Price / set

☐ For Size 0 (3501103)

Back pelotte pad with chest strap – height, width and depth adjustable, PU padded (not possible for Sizes 0+4)

Available on request

Price / set

☐ For Size 1 (7501006)
☐ For Size 2 (7502006)
☐ For Size 3 (7503006)

Folding seat – padded and covered (not possible for Size 0)

Price / piece

☐ For Size 1 (7501007)
☐ For Size 2 (7502007)
☐ For Size 3+4 (7503007)

PROFESSIONAL ASSISTANCE for LIVING
Equipment with expertise...

Simone FEJER
Physiotherapist

T: 0434 339 910
E: simone@pafl.com.au
W: www.pafl.com.au